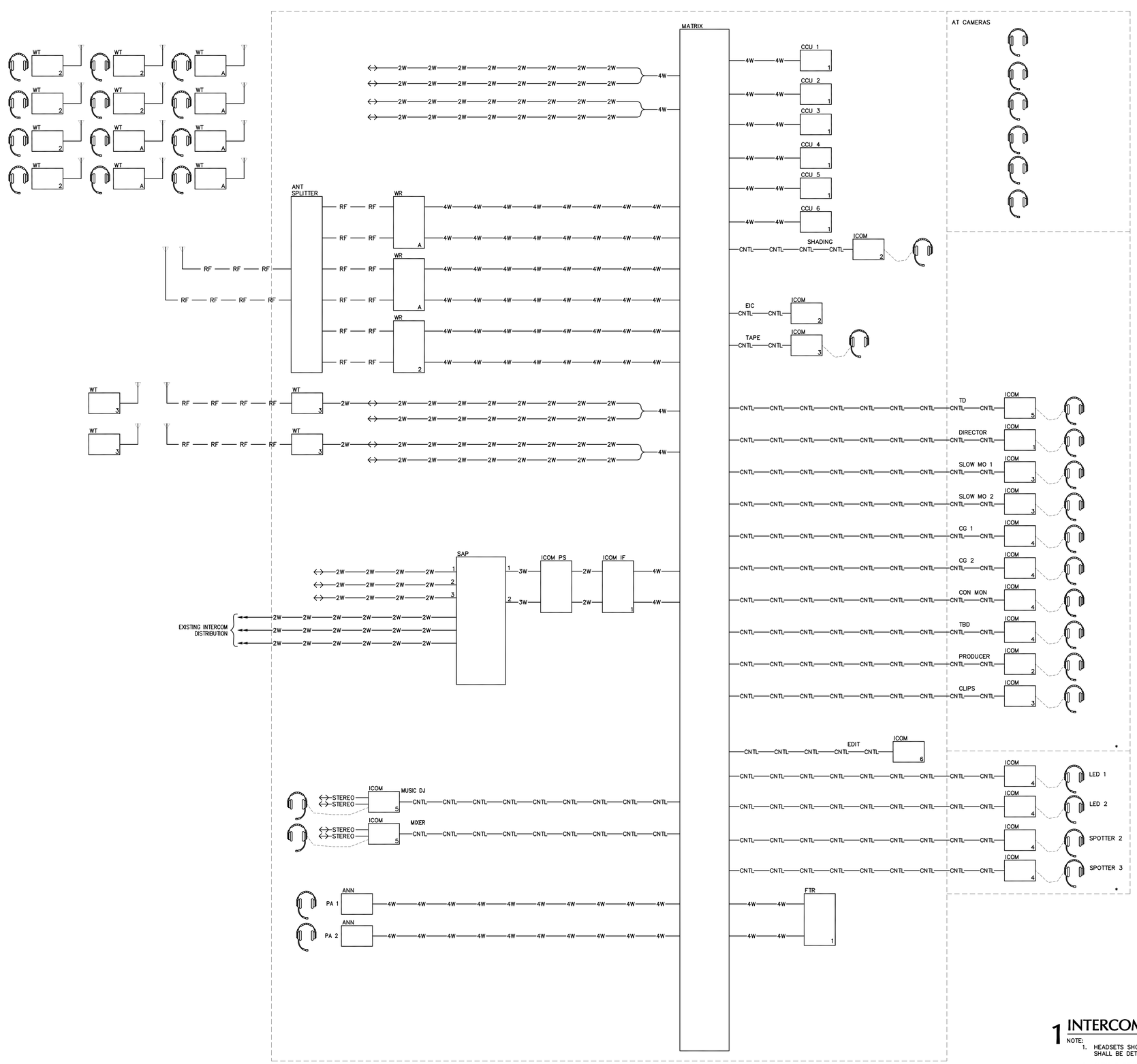

FUNCTIONAL LEGEND

- COMP — COMPONENT CABLE; SPECIAL
- QM — AV COMPONENT AND CONTROL CABLE
- RGBHV — RGBHV – 5 COAX CONNECTION
- CATX
- MONO — MONO AUDIO CONNECTION
- STEREO AUDIO CONNECTION (AES UB)
- VGA — VGA CONNECTION
- Y/C — YC – 2 COAX CONNECTION
- YUV — YUV (Y, R–Y, B–Y) – 3 COAX COMPONENT CONNECTION
- NTSC — NTSC COMPOSITE VIDEO OR AUDIO
- CNTL — CONTROL
- DATA — DATA CONNECTION
- 232 — SERIAL 232
- 422 — SERIAL 422
- CATX — CATX
- ETH — ETHERNET
- DVI — DVI CONNECTION
- B94 — IEEE 1394/FIREWIRE CONNECTION
- JACK CONNECTION
- NORMAL THROUGH PATCH
- NORMAL THROUGH JACK WITH UNUSED PORTION RESERVED FOR FUTURE
- NON–NORMAL PATCH JACK
- PATCH
- F — FIBER
- 2W — 2W
- 3W — 3W
- 4W — 4W
- FROM TO ANOTHER SHEET / SYSTEM
- DEVICE ABBREVIATION
- UNIQUE DEVICE ID
- DEVICE TYPE
- (X) INDICATES ACTIVE LOOP THROUGH

1 INTERCOM FUNCTIONAL DIAGRAM

NOTE:

1. HEADSETS SHOWN ARE CONCEPTUAL; SELECTION AND CONFIGURATION SHALL BE DETERMINED WITH OWNER.
2. AUDIO PATCHES AND ANALOG CONNECTIONS TERMINATE IN RACK ## PATCH PANELS SUPPLIED BY VIDEO REPLAY. COORDINATE WITH SOUND SYSTEM.
3. MATRIX IS TWO SEPARATE FRAMES CONNECTED BY FIBER.

POPULOUS™
DRAWING PEOPLE TOGETHER®

POPULOUS, INC
Architecture, Engineering, Planning, Interiors, Facility Programming
300 Wyandotte, Suite 200
Kansas City, Missouri 64105
816-221-1500

STRUCTURAL ENGINEERS
Walter P Moore
816-701-2100

MECHANICAL ELECTRICAL ENGINEERS
ME Engineers
816-474-1056

AUDIO VISUAL/ACOUSTICAL CONSULTANTS
WJHW
972-934-3700

FOOD SERVICE CONSULTANTS
S2O Consultants
224-717-1555

CIVIL ENGINEERS
Tallaferro & Browne, Inc.
816-283-3456

CODE CONSULTANTS
FSC, Inc.
913-722-3473

ASSOCIATE ARCHITECT
Junk Architects
816-472-7722

LANDSCAPE ARCHITECT
Young + Oring Landscape Architecture
913-642-9664

M/E/P/ FOODSERVICE ENGINEERS
BGR Consulting Engineers
816-842-2800

FIRE PROTECTION ENGINEERS
CMG Fire Protection Engineering, Inc.
913-239-8900

WAYFINDING/SIGNAGE
Ghostfire Design, Inc.
816-842-4468

THE NEW ARROWHEAD STADIUM
KANSAS CITY, MISSOURI

VIDEO REPLAY PACKAGE

PACKAGE

A B D C

PROJECT NO.:

DRAWN BY: REVIEWED BY:

ISSUE DATE
06/05/2009

INTERCOM FUNCTIONAL DIAGRAM

AV11-25

© Copyright Populous Inc. 2009